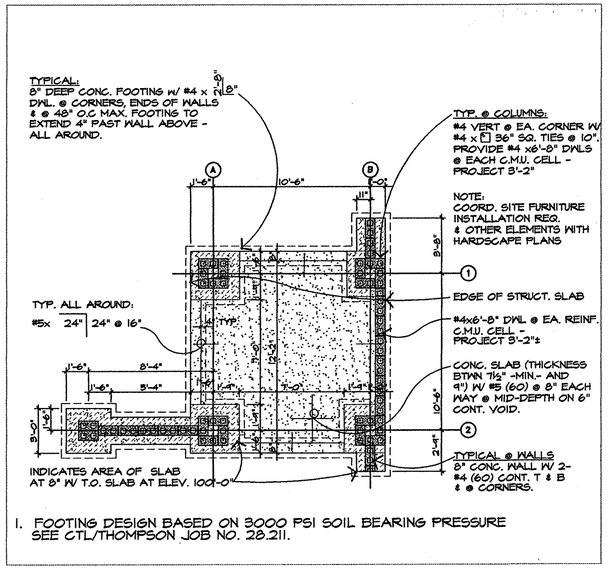

1. FOOTING DESIGN BASED ON 3000 PSI SOIL BEARING PRESSURE SEE CTL/THOMPSON JOB NO. 28.211.

ADD/ALTERNATE: PEDESTRIAN PORTAL

7 CONC.FOOTINGW/STRUCT.SLAB

1/4"=1'-0"

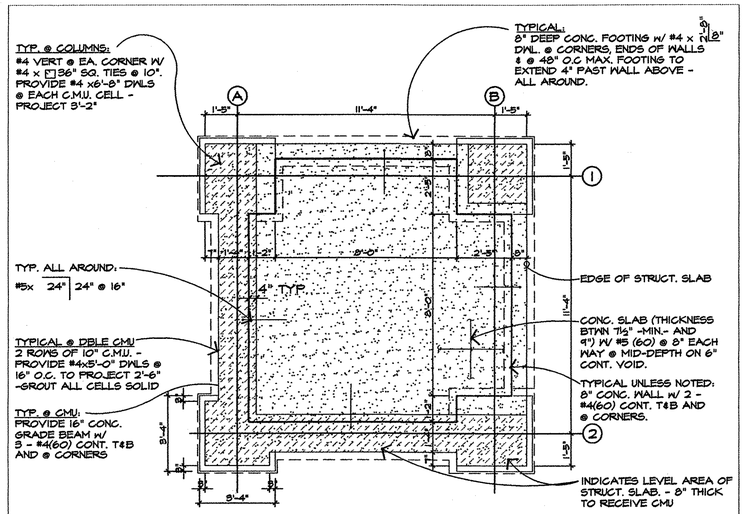

1. FOOTING DESIGN BASED ON 3000 PSI SOIL BEARING PRESSURE SEE CTL/THOMPSON JOB NO. 28.211.

ADD/ALTERNATE: POSTAL CENTER

8 CONC.FOOTINGW/STRUCT.SLAB

1/4"=1'-0"

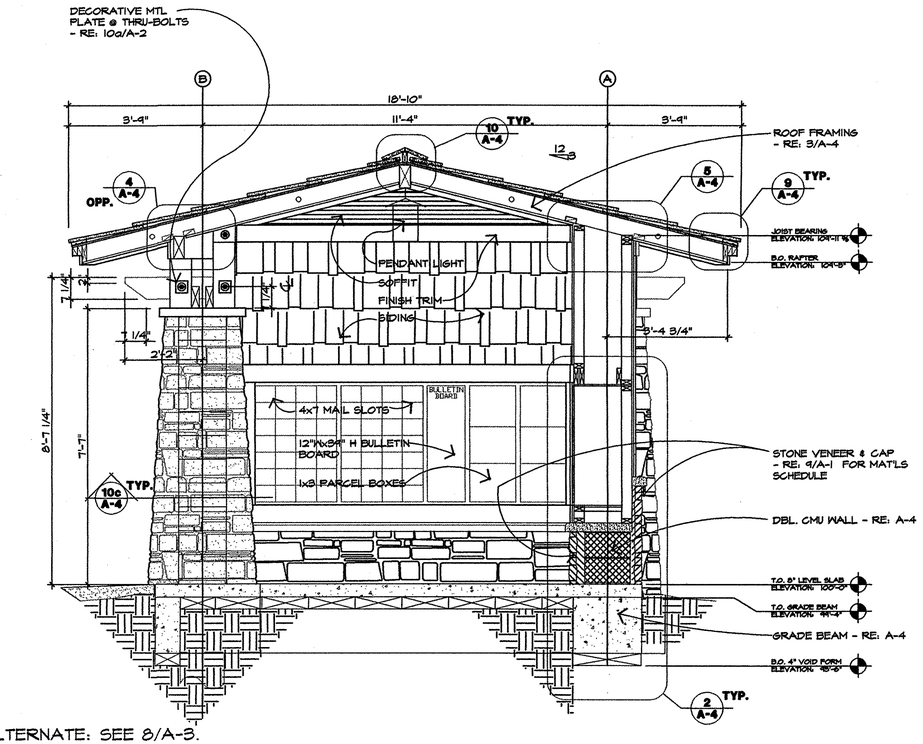

ADD/ALTERNATE: SEE 8/A-3.

2 CROSS SECTION

1/2" = 1'-0"

RE: A-1 FOR TYPICAL CALLOUTS - RE: 9/A-1 FOR TYP. MATERIALS AND FINISHES

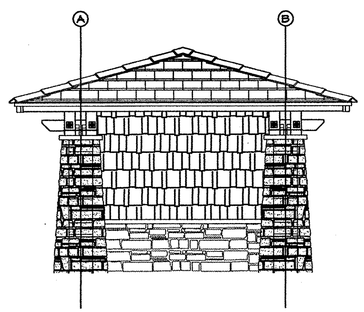

6 ELEVATION

1/4" = 1'-0"

RE: A-1 FOR TYPICAL CALLOUTS.
RE: 9/A-1 FOR TYP. MATERIALS AND FINISHES

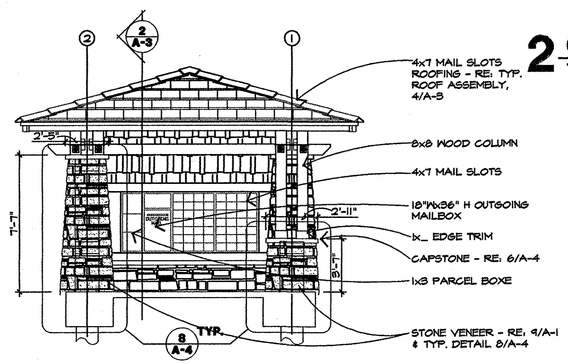

5 ELEVATION

1/4" = 1'-0"

RE: A-1 FOR TYPICAL CALLOUTS.
RE: 9/A-1 FOR TYP. MATERIALS AND FINISHES

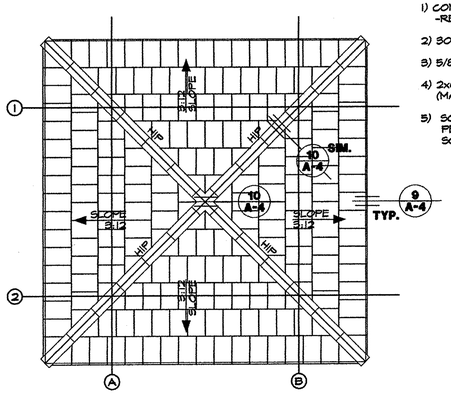

TYPICAL ROOF ASSEMBLY:

1) CONC. ROOFING TILE -RE: SPECS & 9/A-1
2) 30# FELT UNDERLAYMENT
3) 5/8" PLYWOOD SHEATHING
4) 2x6 RAFTERS @ 24" O.C. (MAX.)
5) SOFFIT MATERIAL TO BE PER FINISH & MATERIALS SCHEDULE 9/A-1

4 ROOF PLAN

1/4" = 1'-0"

RE: A-1 FOR TYPICAL CALLOUTS.
RE: 9/A-1 FOR TYP. MATERIALS AND FINISHES

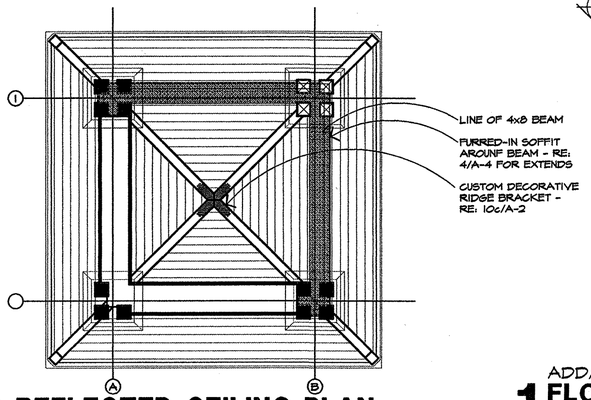

3 REFLECTED CEILING PLAN

1/4" = 1'-0"

RE: A-1 FOR TYPICAL CALLOUTS.
RE: 9/A-1 FOR TYP. MATERIALS AND FINISHES

ADD/ALTERNATE: SEE 8/A-3.

1 FLOOR PLAN

1/2" = 1'-0"

RE: A-1 FOR TYPICAL CALLOUTS - RE: 9/A-1 FOR TYP. MATERIALS AND FINISHES

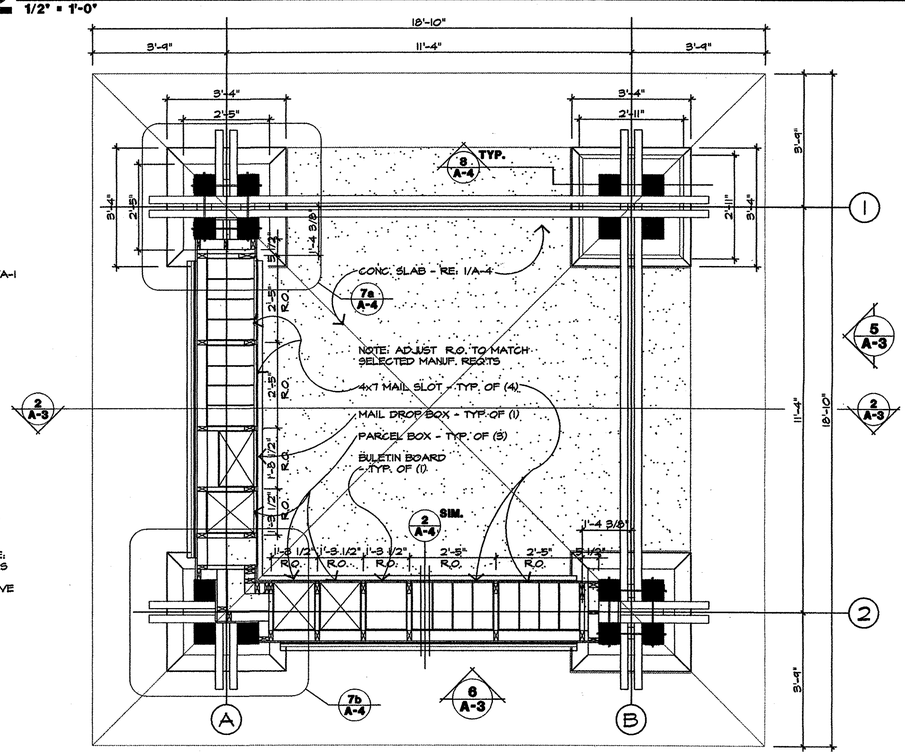

BID DOCUMENTS

DOWNING THORPE JAMES

ARCHITECTURE
PLANNING
LANDSCAPE ARCHITECTURE
ENGINEERING

1881 Ninth Street, Suite 103
Boulder, Colorado 80302
303-443-7533

HIGHLANDS RANCH

GOLF CLUB

SCALE:	AS SHOWN
DRAWN BY:	NBN
CHECKED BY:	DTJ
PROJECT NUMBER:	97018.41
ISSUE DATE:	July 10, 1998
REVISIONS:	August 26, 1998

SHEET TITLE:
POSTAL CENTER PLANS & ELEVATION

SHEET NUMBER:
A-3